OptoSupply
Light It Up

3mm Round Yellow Green LED

OSG8NU3M44A

■Features

- 3mm Round Standard Directivity
- UV Resistant Epoxy
- Green Diffused Type

■Outline Dimension

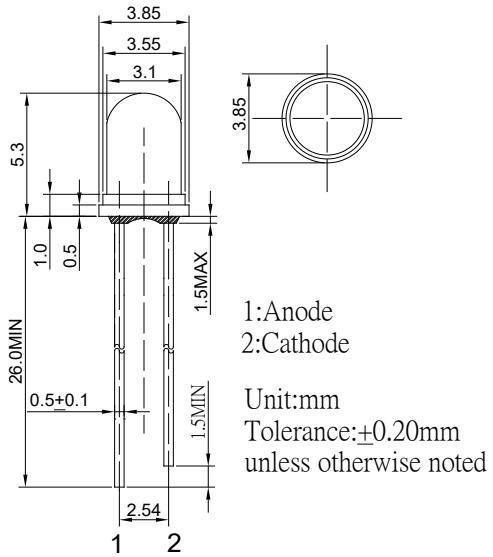

■Applications

- Toys & Games
- Indications
- Decorations

■Absolute Maximum Rating (Ta=25℃)

Item	Symbol	Value	Unit
DC Forward Current	I_F	30	mA
Pulse Forward Current#	I_{FP}	100	mA
Reverse Voltage	V_R	5	V
Power Dissipation	P_D	78	mW
Operating Temperature	Topr	-30 ~ +85	℃
Storage Temperature	Tstg	-40~ +100	℃
Lead Soldering Temperature	Tsol	260℃/5sec	-

#Pulse width Max.10ms Duty ratio max 1/10

■Directivity

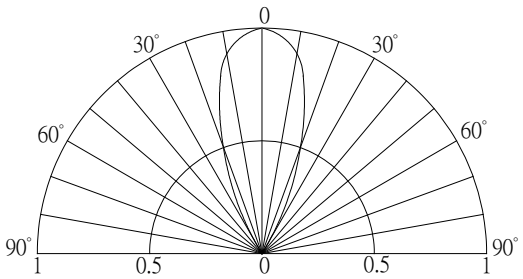

■Electrical -Optical Characteristics (Ta=25℃)

Item	Symbol	Condition	Min.	Typ.	Max.	Unit
DC Forward Voltage	V_F	I_F=20mA	1.8	2.1	2.6	V
DC Reverse Current	I_R	V_R=5V	-	-	10	μA
Domi. Wavelength*	λ_D	I_F=20mA	565	570	575	nm
Luminous Intensity*	I_V	I_F=20mA	68	100	-	mcd
50% Power Angle	$2\theta_{1/2}$	I_F=20mA	-	40	-	deg

*1 Tolerance of measurements of dominant wavelength is ±1nm
*2 Tolerance of measurements of luminous intensity is ±15%
*3 Tolerance of measurements of forward voltage is ±0.1V